Sunbeam

HOUSEHOLD PRODUCTS

ROTISSERIE

SERVICE MANUAL 2001

9/10/2001

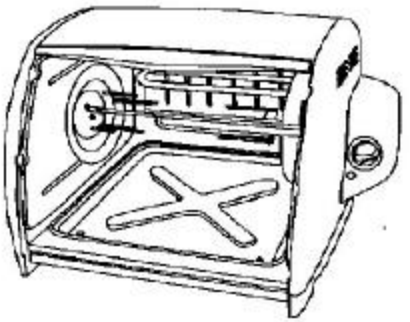

				2001		
				PART NO.		
4785		X				
BASIC PARTS	X					

120 V., 950 W., 50-60 HZ.

KEY #	DESCRIPTION	PART #	QUANTITY REQ'D	1	2	3	4	5
1	SPIT FORK	108765-000-000	1					
2	DRIP PAN	108766-000-000	1					
3	DOOR REMOVABLE	108767-000-000	1					
4	LID, FOOD BASKET	108768-000-000	1					
5	BASE, FOOD BASKET (OLD STYLE)	108769-000-000	1					
5	BASE, FOOD BASKET (NEW STYLE)	108769-001-000	1					
6	RIGHT SPLIT WHEEL (OLD STYLE)	108764-000-000	1					
6	RIGHT SPLIT WHEEL (NEW STYLE)	108764-001-000	1					
7	LEFT SPLIT WHEEL (OLD STYLE)	108763-000-000	1					
7	SPLIT WHEEL (NEW STYLE)	108763-001-000	1					
8	HEAT SHIELD REFLECTOR	109229-000-000	1					
-	INSTRUCTION BOOK	108315-000-000	1					

** NOT SHOWN ON DRAWING

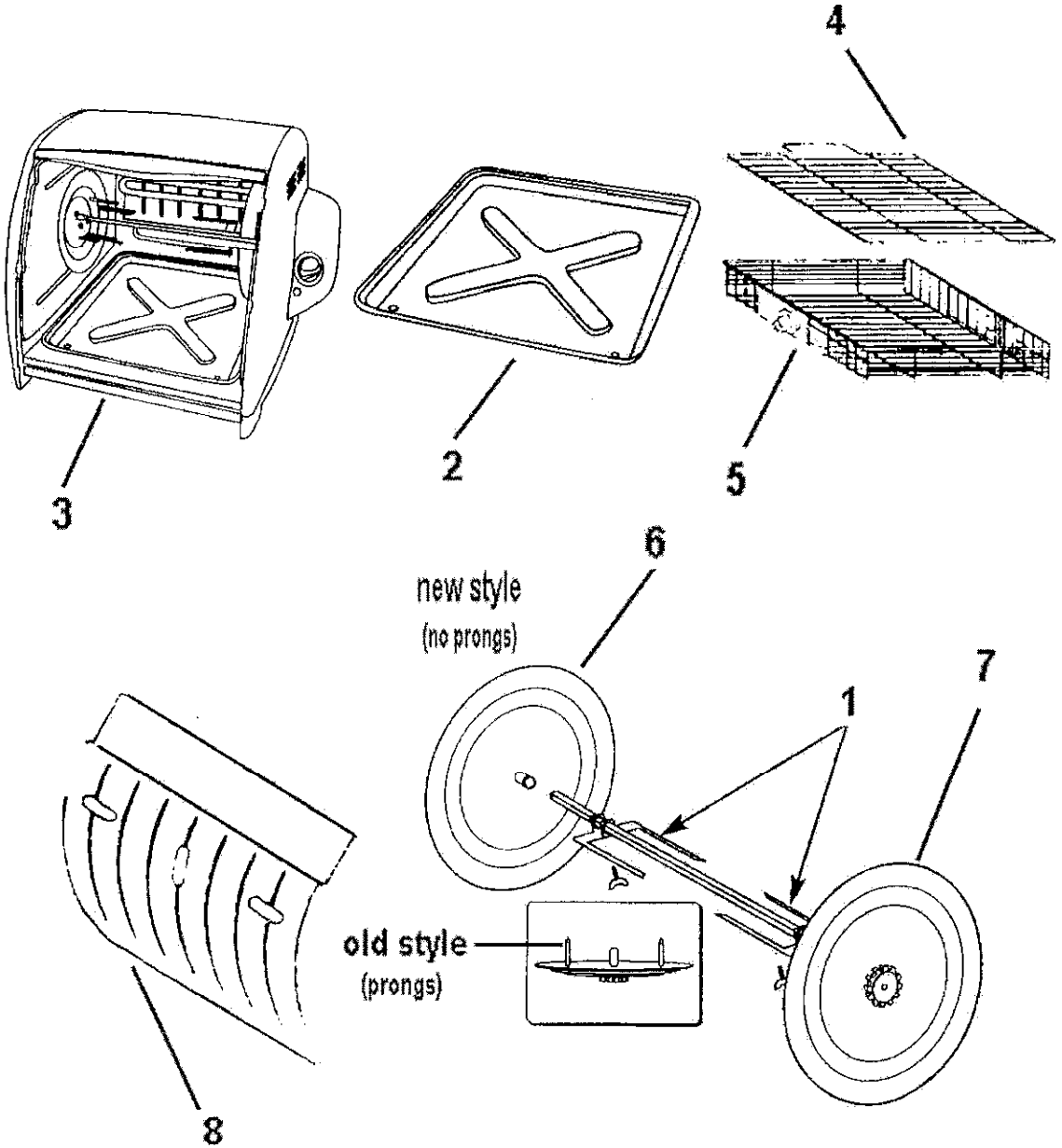
4
3
2
5
6
new style
(no prongs)
7
1
old style
(prongs)
8