Sunbeam

SERVICE MANUAL 1998

HOUSEHOLD PRODUCTS

11/30/2000

VEGETABLE STEAMER

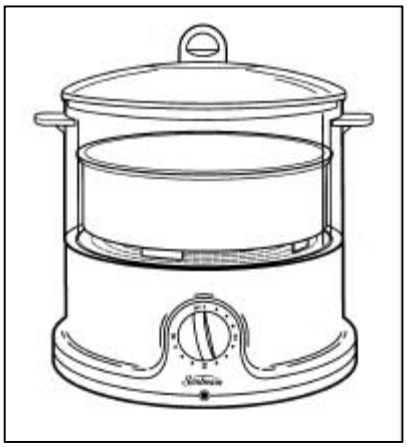

4713

				1998		
		X	PART NO.			
4713 - DI (SUB 4714)						
BASIC PARTS	X					

120 V., 900 W., 60Hz.

KEY #	DESCRIPTION	PART #	QUANTITY REQ'D	1	2	3	4	5
1	LID, STEAMER	082914-017-000	1					
2	STAKING STEAM BOWL	082914-018-000	1					
3	SEPARATOR RING	082914-019-000	1					
4	RICE BOWL	082914-020-000	1					
5	STEAMER BOWL	082914-021-000	1					
6	DRIP TRAY	082914-022-000	1					
**	STRAINER / FILTER	082914-016-000	1					
**	INST. BOOK	067531-002-000	1					

**** NOT SHOWN ON DRAWING**

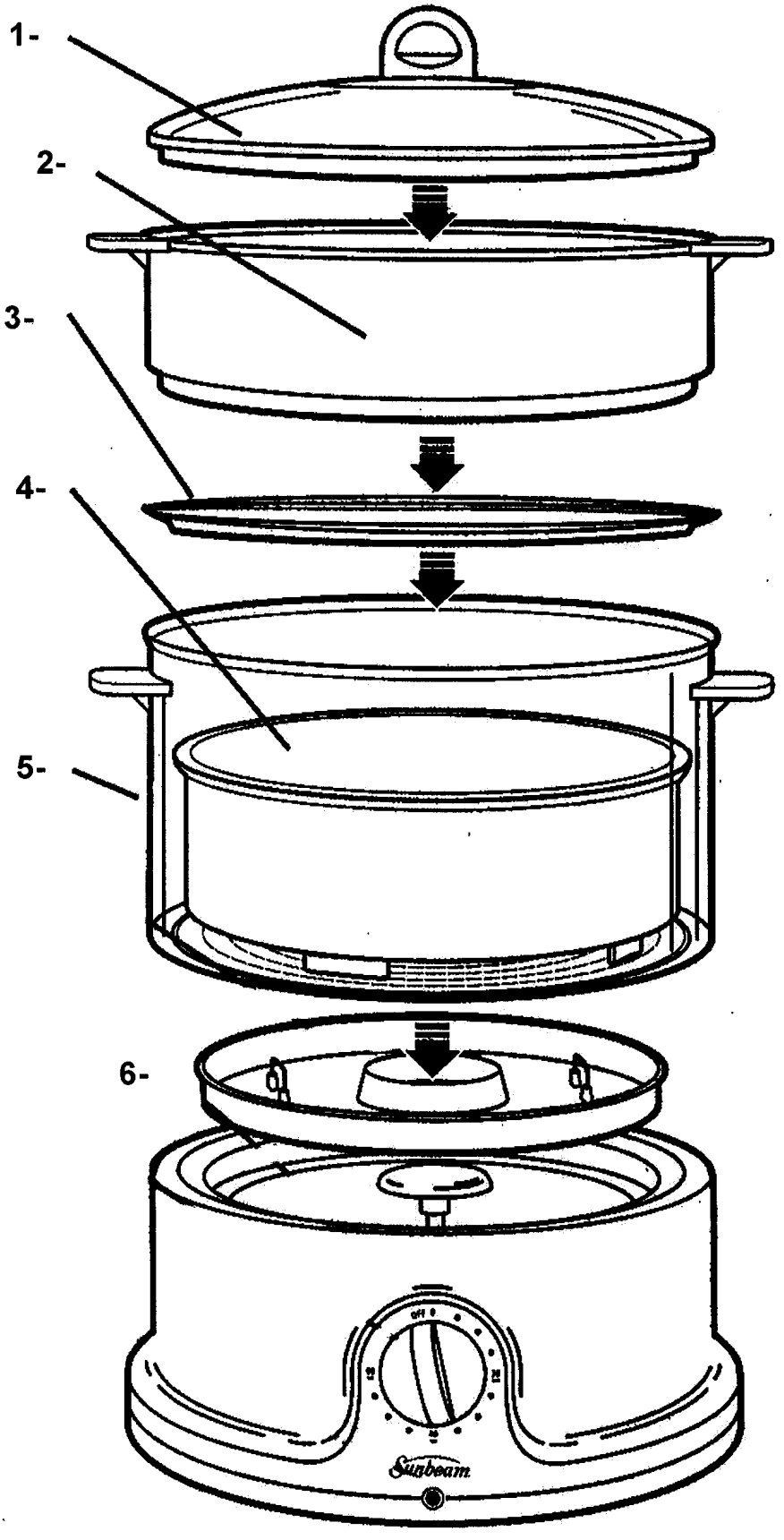
1-
2-
3-
4-
5-
6-
Sunbeam