Sunbeam

SERVICE MANUAL 2000

HOUSEHOLD PRODUCTS

HAND/STAND MIXER

11/30/2000

				2000		
		X	PART NO.			
2372		X				
2372 NEW DESIGN			X			
BASIC PARTS	X					

120V., 200W., 25-60HZ.

KEY #	DESCRIPTION	STATUS	PART #	QUANTITY REQ'D	1	2	3	4	5
1	KNOB- SWITCH		056030-000-355	1					
2	WHIPPER		047948-000-000	2					
3	BOWL- GLASS	OB	019321-005-000	1					
3	BOWL- GLASS SCALLOPED		105507-000-000	1					
4**	TURNABLE		018130-021-000		1				
5**	STAND		056223-000-805		1				
5	STAND (NEW DESIGN)		105015-000-805			1			
5.1**	TURNABLE (NEW DESIGN)		105016-000-805			1			
6	CRADLE		056036-000-805	1					
6	CRADLE (NEW DESIGN)		105014-000-805			1			
6.1	LATCH CRADLE (NEW DESIGN)		105018-000-859			1			
7	DOUGH HOOK - LEFT		056248-000-000	1					
8	DOUGH HOOK - RIGHT		056249-000-000	1					
**	FOOT RUBBER		013869-000-000	4					
**	INSTRUCTIONS BOOK		065742-000-000		1				
**	INSTRUCTIONS BOOK (NEW DESIGN)		105506-000-000			1			

**** NOT SHOWN ON DRAWING**

OB - OBSOLETE ITEM

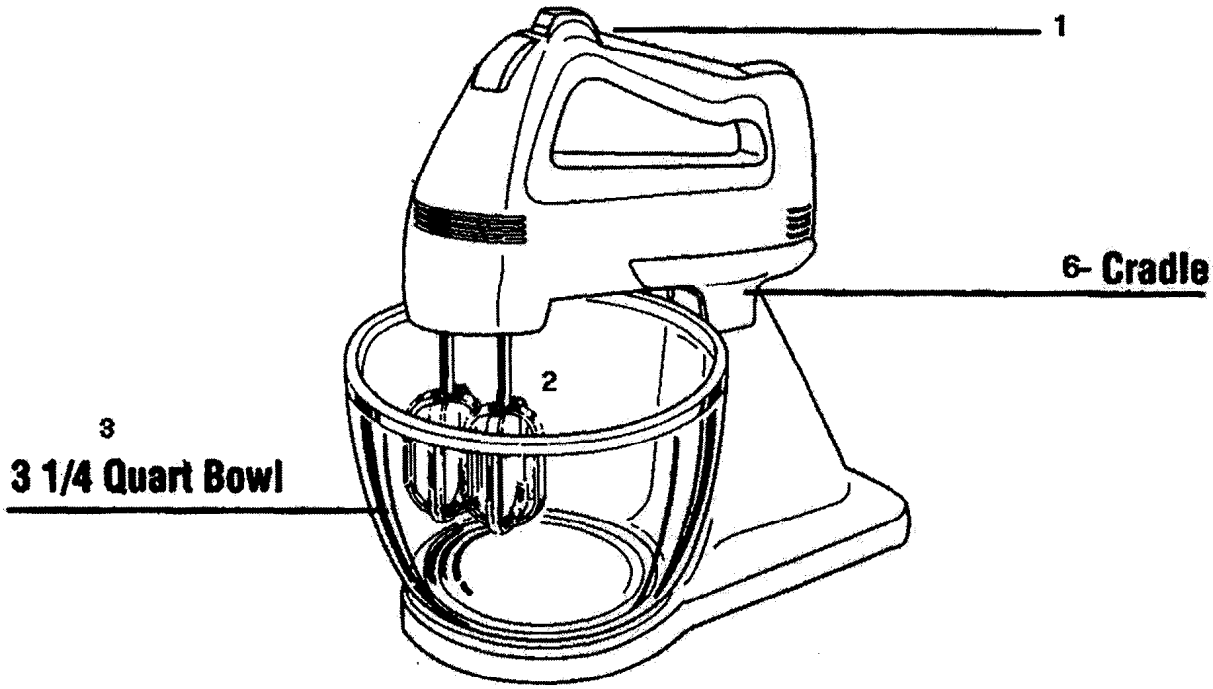
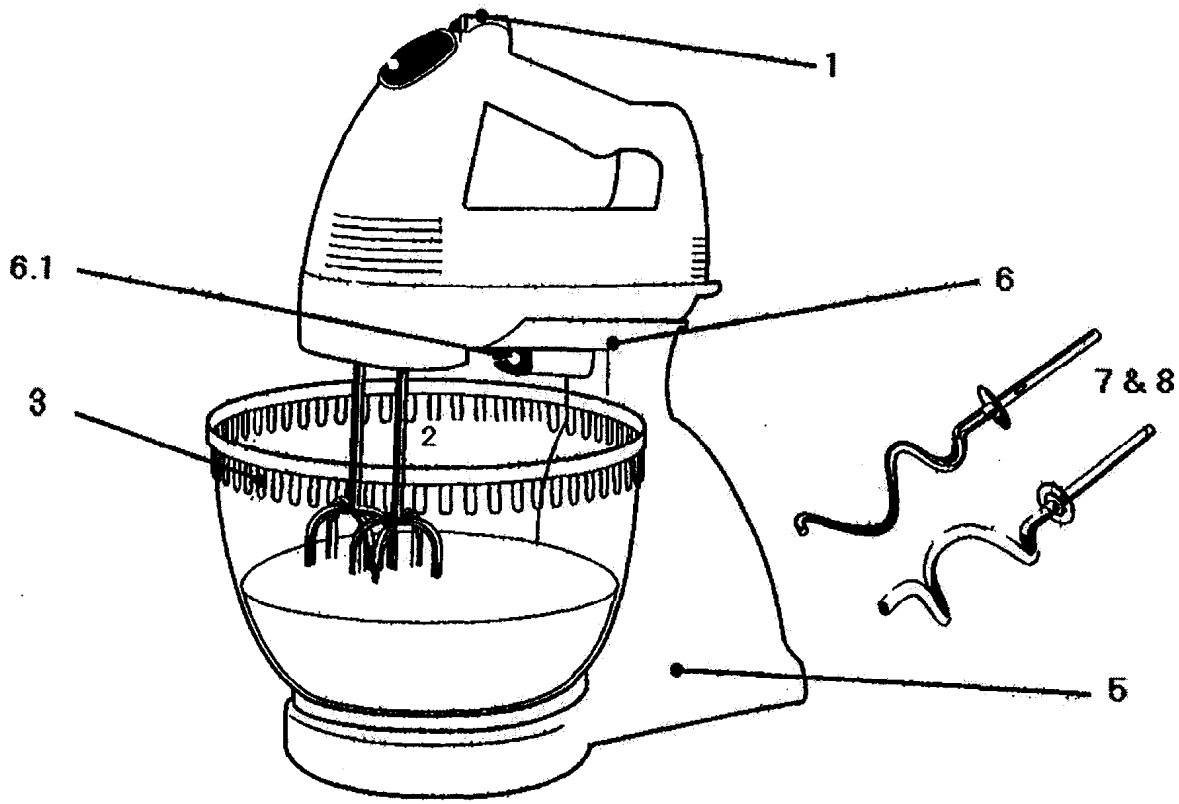
NEW DESIGN